IMPORTANT NOTE
BEFORE FITTING THE BARREL.
CHECK THE FIXING DISTANCE ACROSS THE SIDE FIX END PLATES AND REFER TO THE ORDER INFORMATION.
THE DISTANCE ACROSS THE OUTSIDE OF THE END PLATES (SYSTEM WIDTH) MUST BE AS PER THE ACTUAL ORDER.
THE DISTANCE ACROSS THE END PLATES **MUST NOT** BE **WIDER** THAN THE REQUESTED SIZE. **THIS IS SAFETY CRITICAL.**
WHEN SIDE FIXING IT IS **INSTALLER RESPONSIBILITY** TO **SHIM** SIDE FIX END PLATES SO THAT **CORRECT SYSTEM WIDTH** IS ACHIEVED.
THIS IS SAFETY CRITICAL.

PRODUCTION	APPROVED FOR PRODUCTION
PURCHASING	APPROVED FOR PURCHASING
SALES	NO
MARKETING	NO

SIDE FIX

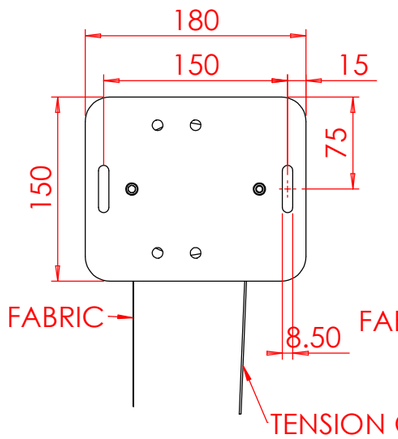

FACE FIX

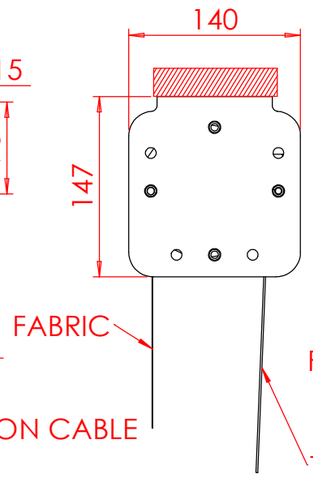

TOP FIX

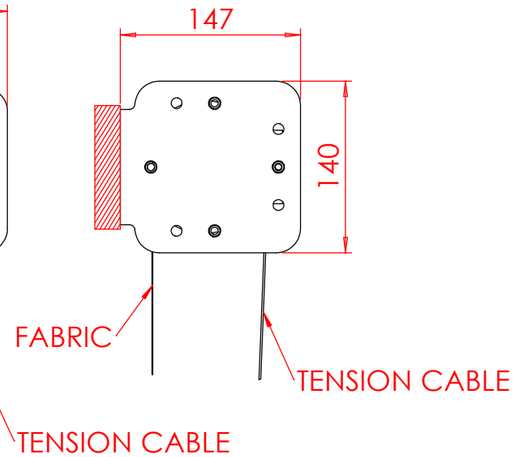

PIVOTING RETURN PULLEY POSSIBLE FIXING OPTIONS

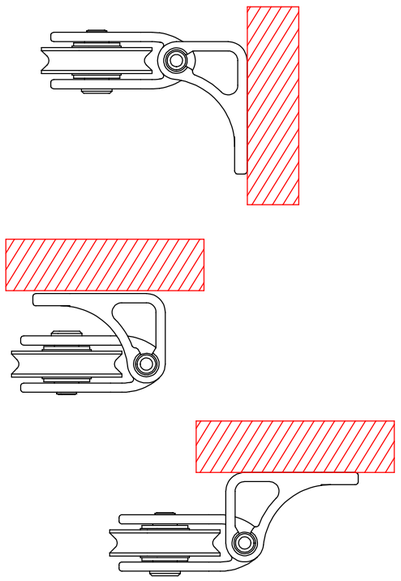

HEMBAR END CAP

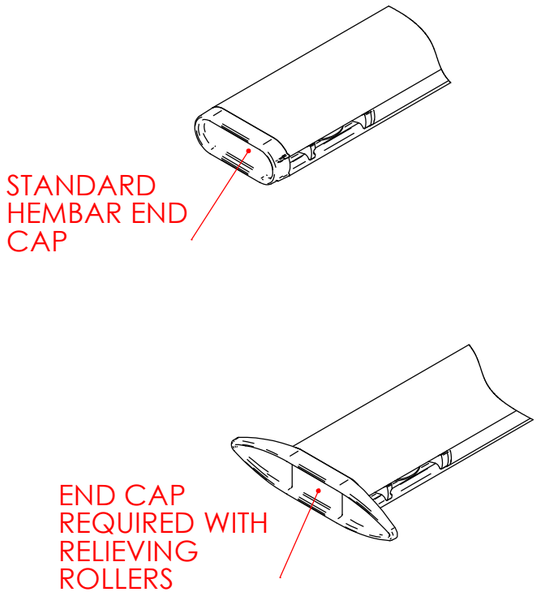

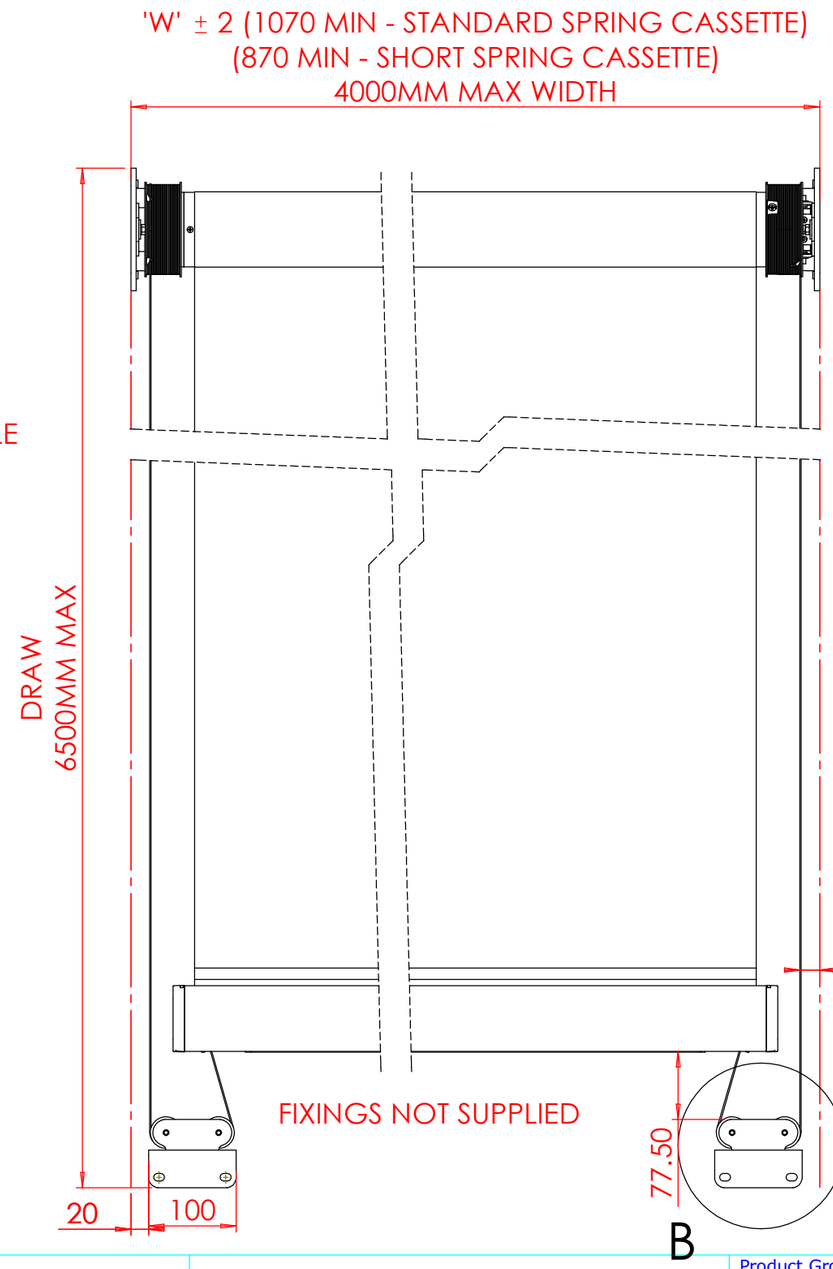

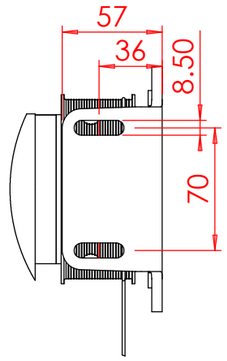

NOTE
WHEN 'D' EXCEEDS 3 METERS RELIEVING ROLLERS ARE REQUIRED:
∅50MM STANDARD
∅70MM ROLLERS USED FOR CURVED / PITCHED PROFILES)

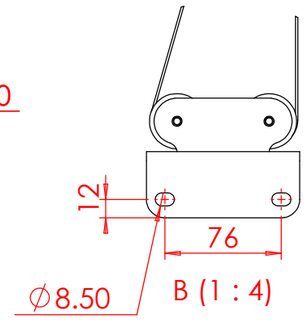

THIRD ANGLE PROJECTION

REMOVE ALL SHARP EDGES

IF IN DOUBT ASK | DO NOT SCALE

GENERAL TOLERANCES TO ISO2768-m

ALL DIMNS.IN mm | DRAWN TO BS308

This drawing is copyright and the exclusive property of GUTHRIE DOUGLAS GROUP LTD., and must not be copied, used or exhibited without prior written consent.

Guthrie Douglas
12 Heathcote Way, Heathcote Industrial Estate, Warwick CV34 6TE, UK
Tel : (01926) 310850 Fax : (01926) 832914

Customer		
Material	Scale 1:7	Size A3
Surface Finish	Special	

TESS SYSTEMS

TESS 100

INSTALLATION DRAWING

Product Group			Item No.
SOLAR			N/A
Drawn	Date	Checked	Date
ashley.smith	28-07-2017	Thomas.Allies	25-01-2023

DRG.NO:
GDP25273 / 03
SHEET 1 OF 1 SHEETS